16-32 MONO INPUTS | 3 STEREO INPUTS | 12-24 MIX OUTPUTS | 2 STEREO MATRIX OUTS | 19" RACK MOUNTABLE
15 SOFT KEYS | 16 CUSTOM SELECT KEYS | 4 STEREO GROUPS | 4 MUTE GROUPS | 4 FX ENGINES | 4 FX SENDS / RETURNS
4 DCA GROUPS | USB AUDIO STREAMING | DAW MIDI CONTROL | AES DIGITAL OUT | CHANNEL DUCKER

Qu-Pac

ULTRA COMPACT DIGITAL MIXER

FOR LIVE, STUDIO AND INSTALLATION

Qu-Pac takes the power and legendary quality of the Qu family and shrinks it into an uber-compact desk or rack mount format. Qu-Pac frees you to mix from your iPad, but the full functions of the mixer can also be accessed from the front panel and touchscreen.

With custom settings and Cat5 expansion up to 38 inputs, Qu-Pac provides a scalable, failsafe solution for hardworking bands, schools, hotels, corporate events, live music bars, conferences, personal mixing and many more scenarios requiring a pro mixing solution in a tiny footprint.

User permissions and the customizable Qu-Control screen make Qu-Pac convenient and safe for day-to-day use by non-technical staff.

All Groups can be used in Mix mode, allowing Qu-Pac to offer up to 11 monitor mixes (4 mono + 7 stereo).

Qu core 32

Qu-Pac has the built-in I/O of a Qu-16 mixer but with the 'brain' of a Qu-32, allowing it to handle up to 38 inputs when connected to our family of AudioRacks over up to 120m of Cat5 cable.

AMM AUTOMATIC MIC MIXING | 800X480 TOUCHSCREEN TOUCH CONTROL | AnoLOGIQ RECALLABLE PREAMP | MULTITRACK RECORD/PLAY Qu-Drive | iLive FX | SNAKE REMOTE AUDIO | ME PERSONAL MIXING SYSTEM | IPAD APP Qu-Pad | PERSONAL MONITORING APP Qu-You

Qu-Pad
App for iPad

AB168
Optional Audio Rack

Qu-Pac
Rack Mounted (easy-fit rack ears included)

Qu-Control

Qu-Control brings up a fully customizable screen which gives access to channels and settings tailored to the user and application. Several 'widgets' can be assigned to the page, these include channel levels, mutes and assignment on/off switches and are arranged to suit the user requirement, for example as a source selection and level control of background music to one or multiple zones.

15 SoftKeys for user-assigned functions such as Mutes, Tap Tempo, Instant Scene Recall/ Navigation or PAFL Clear.

5" 800x480 colour touchscreen with dedicated navigation keys and rotary encoder.

ST3 Mini-jack stereo input for portable devices.

Ultra-compact chassis for desktop or rack mounting (4 rack spaces).

16 custom select keys for quick access to any combination of inputs and masters.

Copy, Paste or Reset any section of processing or a whole channel or mix. The Fn (Function) key brings up a popup page relevant to the current screen.

Channel Screen gives access to any input / master / DCA masters from the front panel.

Qu-Drive multitrack / stereo recording and playback, data transfer, archiving and firmware update.

1 Balanced Stereo Inputs

2 Ethernet network port for remote / wi-fi control

3 dSNAKE™ Remote Audio port for digital snake expansion (up to 32 mics), personal monitoring and more outputs.

4 USB audio streaming, class-compliant on Mac

5 12 Mix Outputs on XLR, up to 24 via dSNAKE

6 2TRK Out

7 Patchable Alt Out

8 AES digital stereo output

9 Dedicated Talkback preamp

Allen & Heath Limited
Kernick Industrial Estate
Penryn, Cornwall,
TR10 9LU, UK
www.allen-heath.com

Technical Datasheet

Overview

- Rack-mountable Digital Mixer for Live, Studio and Installation
- 5” (800x480 pixel) colour touch screen for quick control
- 16-32 Mono Inputs (TRS + XLR)
- 3 Stereo Inputs (TRS)
- 4 stereo FX with dedicated Sends and Returns
- 12-24 Mix Outputs (XLR)
- 4 Stereo Groups
- 2 Stereo Matrix Outs
- Customizable Qu-Control screen
- 15 SoftKeys
- Extra stereo outputs – AES digital, Alt Out, 2TRK out
- Talkback mic input
- dSNAKE Cat5 snake for remote audio using AR2412, AR84 or AB168
- 4 Mute Groups
- 4 DCA Groups
- AnaLOGIQ™ total recall analogue preamps
- Effects ported from the flagship iLive console
- Dedicated stereo FX return channels
- Master strip for quick access to mix levels and processing
- Input channel linking for stereo sources
- Input processing – Preamp, HPF, Gate, PEQ, Compressor, Delay
- Automatic Mic Mixing
- Output processing – PEQ, Graphic EQ, Compressor, Delay
- 31 Band Real Time Analysis and Spectrogram
- Quick copy and reset of processing, mixes and scenes
- 100 Scene memories
- Channel Safes, Global and per Scene Recall Filters
- FX, processing and channel User Libraries
- Qu-Drive for stereo and 18-track recording/playback to USB hard drive
- USB streaming to/from an Apple® Mac or Windows™ PC computer
- MIDI DAW Control driver for Mac (converts to HUI or Mackie Control)
- USB transfer of Scenes, Libraries, Shows
- User assignable Custom Layer
- Qu-Pad engineer’s mixing wireless remote app for iPad
- Qu-You personal monitoring app for iPhone, iPad, iPod Touch
- Compatible with the Allen & Heath ME personal mixing system
- User Permissions to restrict operator access
- Optimised fan-less airflow design for silent operation

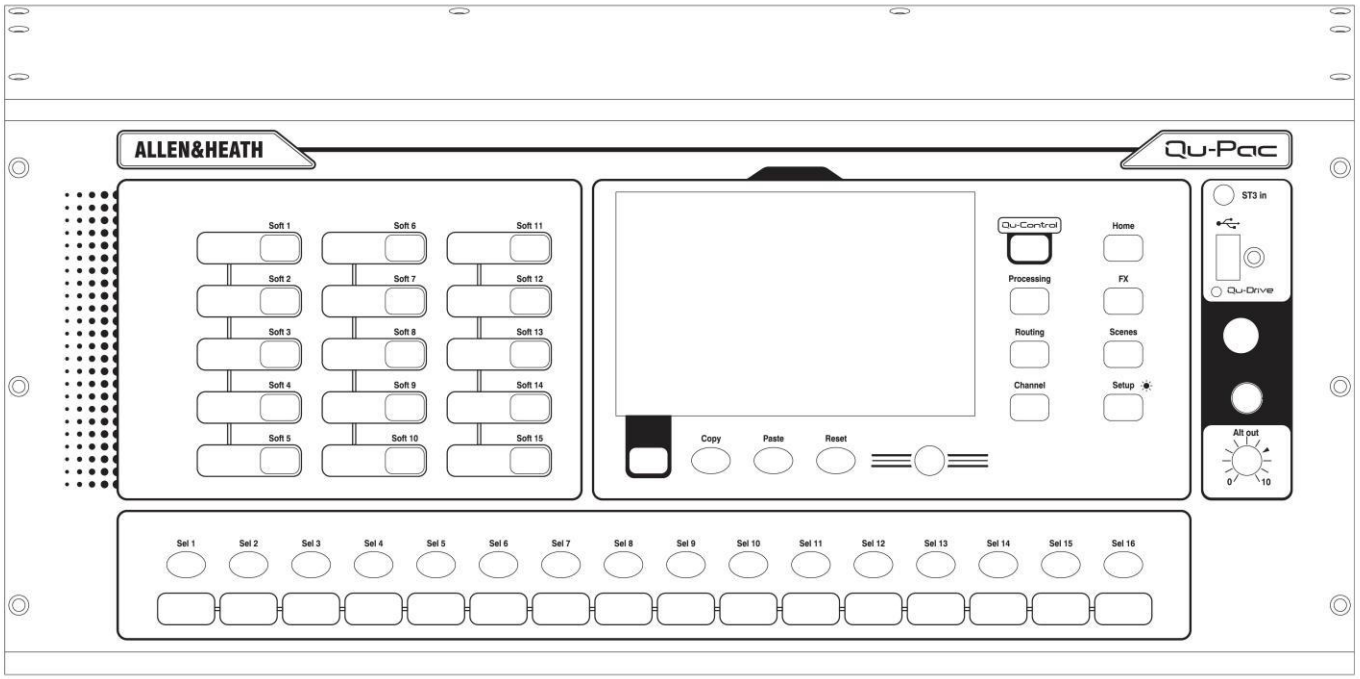

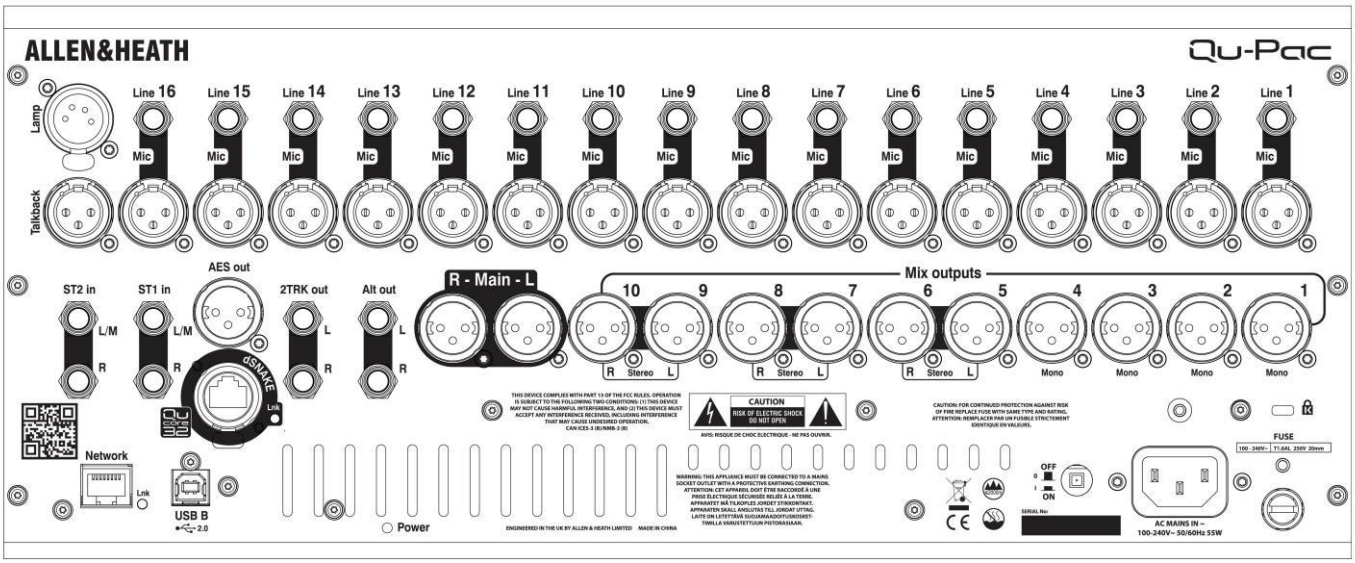
ALLEN&HEATH
Qu-Pac
Lamp
Talkback
Line 16
Line 15
Line 14
Line 13
Line 12
Line 11
Line 10
Line 9
Line 8
Line 7
Line 6
Line 5
Line 4
Line 3
Line 2
Line 1
Mic
AES out
ST2 in
ST1 in
2TRK out
Alt out
L/M
L
R
R - Main - L
Mix outputs
10
9
8
7
6
5
4
3
2
1
R Stereo L
Mono
dSNAKE
Link
Network
USB B
2.0
Power
CAUTION
RISK OF ELECTRIC SHOCK
DO NOT OPEN
FUSE
OFF
ON
AC MAINS IN ~
100-240V~ 50/60Hz 55W

Dimensions

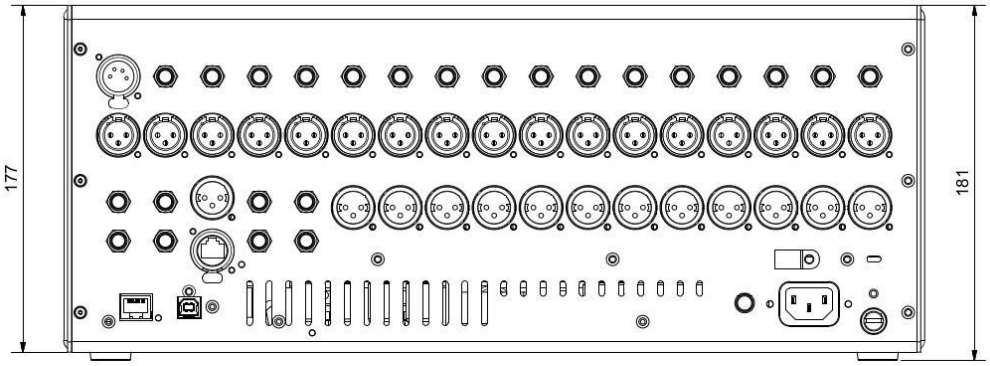
177
181

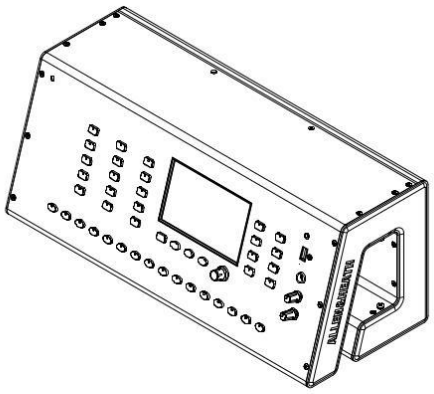

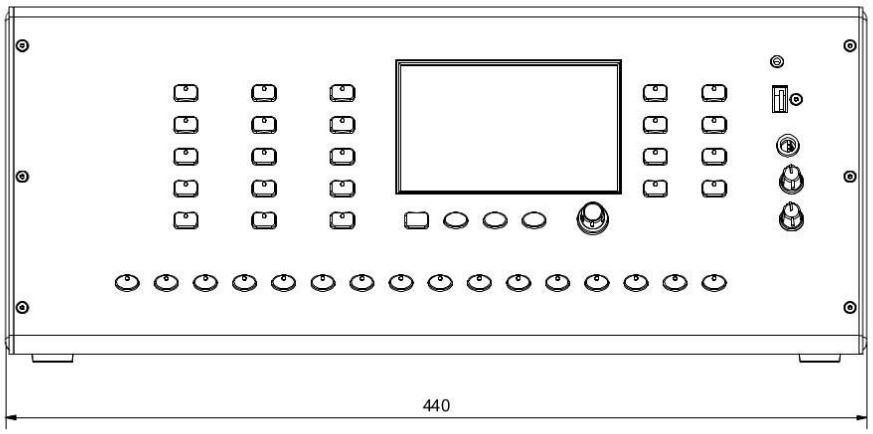
440

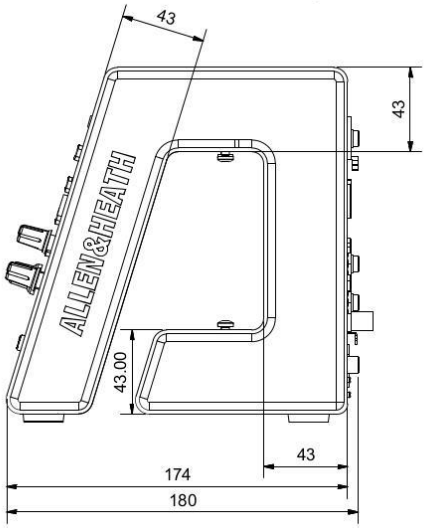
43
43
ALLEN&HEATH
43.00
43
174
180

A&E Specifications

The mixer shall be a compact, rack-mountable digital mixing solution without physical fader strips, but shall include 16 mono and 3 stereo line input channels mixing to 12 mix outputs and 4 stereo rack FX engines, 4 DCA groups and 4 Mute groups. All output mix channels shall contain Insert, Parametric EQ, Graphic EQ, Compressor, and Delay. Signal delays in the system shall be adjustable in Milliseconds.

Pre/Post fader routing and assignments, processing of signals, level sends, FX sends, DCA and Mute Groups shall be accessed and adjusted via a 5-inch colour touchscreen provided on front panel of the mixer or from Apple iOS touchscreen devices.

There shall be a Channel page on the touch screen replacing physical fader strips with different tabs providing access to Input Channels, FX, Groups, Mixes, DCA and Mute Groups and control of level, mute, pan and PAFL for the selected channel.

And fully-customizable page giving access to channels and settings tailored to the user and the specified application. Several 'widgets' shall be assigned to this page, these shall include channel levels, mutes and assignment on/off switches and shall be arranged to suit the user requirement.

The front panel of the mixer shall include 16 custom select keys and indicators, giving access to any combination of user defined input channels, output channel mixes, FX sends, FX returns or Main mix and also 15 assignable SoftKeys giving access to DCA mute masters and MIDI control as well as Tap Tempo, Instant Scene Recall/Navigation or PAFL Clear.

There shall also be dedicated keys for quick Copy/Paste/Reset of mixes and processing parameters.

The name and number of the selected channel or mix shall always be identified on screen when in the processing or routing pages.

The mixing system shall include application software for Apple iOS touchscreen devices connecting via a wireless network router to an Ethernet LAN port.

The application shall allow control of functions including the preamp gain, phantom power, mix channel levels and shall have a graphical representation of physical controls and indicators including signal processing parameters and shall provide control of channel processing including Parametric EQ, Graphic Eq, Compressor and Delay.

Routing assignments and level adjustments of input signals to all mixes and bus shall be provided and the application software shall provide signal metering and processing threshold indication when online including the Real Time Analyser.

Real Time Analysis metering shall include a spectrogram to allow for accurate monitoring of audio energy across the frequency spectrum over time for the purpose of feedback detection and correction of room acoustics.

A global source option for the direct out of each input channel shall be provided in the routing screen. The tap-off point shall be adjusted to the following positions in the processing path: post Preamp, post HPF, post Gate, post Insert return, post PEQ, post Compressor, and post Delay. There shall be further global options for Follow Fader, and Follow Mute.

Direct outputs shall be assignable via the mixer soft patch bay to any physical output socket interface channel or ME monitoring channel.

4 Stereo Audio Groups shall be available for sub mixing and the combined processing of selected input channels. These Audio Groups shall be switchable to function as additional Send Mixes when required.

A signal generator shall be provided with the ability to send a variable level signal to any output mix with visual assignment status on-screen. The following types of signals shall be available: Sine, White Noise, Pink Noise, and Band-Pass. Comprehensive input, output, and FX channel and RTA metering shall be provided on-screen.

A Channel Ducker shall be provided to reduce the level of selected channels when a designated channel is in use. This channel priority shall be available across all mono and stereo input channels and also channel groups.

An Automatic Mic Mixer shall be provided for automatic level control of up to 16 microphones using a constant gain sharing algorithm to dynamically adjust the gain for each mic in spoken word applications

4 user-assignable effect racks shall be provided with a library of factory preset FX emulations. The FX racks shall be individually configurable as send/return from a channel or FX/Mix, or inserted into input or output channels.

A Talkback facility with the ability to send to any output mix with on screen status indication and an option to enable talkback latching and HPF shall be provided.

A default Mains to PAFL sub-mix and a stereo quarter-inch jack socket for PAFL headphones output shall be provided, with an analogue output level control.

The mixer shall include stereo and 18-track recording/playback to optional USB hard drives. The format shall be 48 kHz/ 24 bit WAV. The mixer shall also play back stereo WAV files at 44.1 or 48 kHz and have a USB Type-A connector on the surface for recording, playback, data-transfer, archiving, and firmware updates to USB drive.

On the rear panel there shall be a Type-B USB connection following the high-speed USB 2.0 standard for multi-channel, bi-directional audio streaming of 32 out / 32 in and MIDI DAW control between the mixer and a computer.

DAW transport control using popular DAW control protocols for computer shall be available via the touch-screen.

The mixer shall provide a Fast Ethernet (100 Mbit/s) port for Cat5 cable connection to a wireless router (access point) for MIDI over TCP/IP control of mixer parameters via Apple iOS touchscreen devices for live mixing control.

There shall be a local "dSNAKE" Cat5 Ethernet audio expansion port with locking Ethercon connector, providing up to 38 input signals and 20 output signals, plus 40 personal mixing sends to be connected over a single cable 'digital snake' and allowing Remote Preamp control to an Allen & Heath AudioRack, or Allen & Heath ME Personal Mixing Systems.

Input and output channel processing and parameters in the mixer shall be saved on demand as a user library item for recall in other channels. Individual processing sections shall be save-able on demand as user library items for that type. All library items shall be stored on board and archived with the show-file. Library items shall be transferrable to USB drive as portable data to be used in other systems.

The mixer shall provide the facility to save 100 scenes of the settings of the mixing system and these scenes shall be nameable. A comprehensive table of Scene Safes shall be provided to prevent selected items from being changed from their state when the safe was enabled. A comprehensive scene filter shall be provided per scene to Allow / Block each parameter saved in a scene from being changed as that scene is recalled.

An option shall be provided for password protection for log-in of several users with different levels of system access and permissions. A particular scene may be chosen to be recalled per change of user-login if desired.

The mixing system shall periodically record all current settings and return the mixer to that state after reboot following a power-cycle.

The mixer shall have a built in power supply accepting AC mains voltages of 100~240V, 50/60 Hz, 55W max via an earthed 3-pin IEC male connector mounted on the rear chassis. A Two Pole Push-Button switch shall be provided near the mains input.

The mixer shall have an optimised fan-less airflow design for silent operation.

Recommended operating temperature for the mixer shall be 5 to 35 degrees Celsius.

The mixer shall be the Allen&Heath Qu-Pac Digital Mixer.

Block Diagram

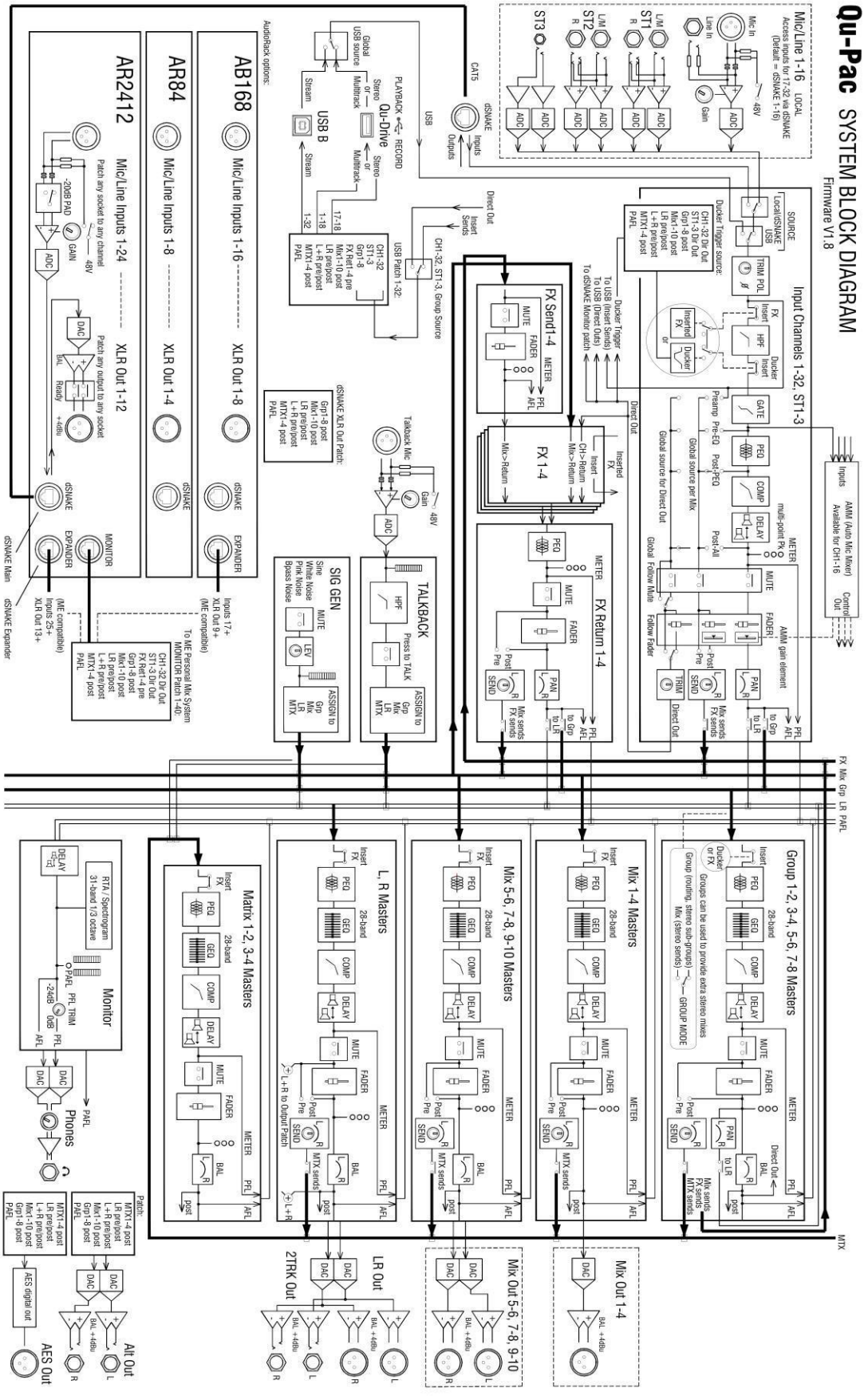

Mixer Specification

Inputs

Mic/Line Inputs	Balanced, XLR and 1/4" TRS jack, fully recallable
Input Sensitivity (XLR / TRS)	-60 to +5dBu / -50 to +15dBu
Analogue Gain	-5 to +60dB, 1dB steps
Maximum Input Level (XLR / TRS)	+19dBu / +29dBu
Input Impedance (XLR / TRS)	>5kΩ / >10 kΩ
THD+N, Unity gain 0dB	0.0005% -89 dBu (20-20kHz, Direct Out @0dBu 1kHz)
THD+N, Mid gain +30dB	0.001% -83dBu (20-20kHz, Direct Out @0dBu 1kHz)
Stereo Line Inputs	
ST1, ST2 connector	Balanced, 1/4" TRS jack, half normalled
ST3 connector	Unbalanced, stereo 3.5mm Mini Jack
Input Sensitivity (ST1, ST2 / ST3)	Nominal +4dBu / 0dBu
Trim	+/-24dB
Maximum Input Level (ST1,ST2 / ST3)	+22dBu / +18dBu
Input Impedance	>7kΩ

Outputs

Mix1-10 and LR Out	Balanced, XLR
Group and Matrix Out	
Output Impedance	<75Ω
Nominal Output	+4dBu = 0dB meter reading
Maximum Output Level	+22dBu
Residual Output Noise	-90 dBu (muted, 20-20kHz)
Stereo Alt Out & 2Trk Out	Balanced, 1/4" TRS jack
Source (Alt Output / 2Trk Output)	Patchable / LR post-fade
Output Impedance	<75Ω
Nominal Output	+4dBu = 0dB meter reading
Maximum Output Level	+22dBu
Residual Output Noise	-90 dBu (muted, 20-20kHz)
AES Digital Output	2 channel, 48kHz sampling rate, XLR 2.5Vpp balanced terminated 110Ω
dSNAKE	
Inputs	Remote source for CH1-32, ST1, ST2, ST3
Outputs	Patchable from Mix1-10, LR, Grp1-8, MTX1-4 Compatible with AudioRacks AR2412, AR84, AB168 Compatible with ME personal mixing system
System	Measured balanced XLR in to XLR out, 0dB gain, 0dBu input
Dynamic Range	112 dB
Frequency Response	+0/-0.5dB 20Hz to 20kHz
Headroom	+18dB
Internal operating Level	0dBu +18dBu = 0dBFS (+22dBu at XLR output)
dBFS Alignment	0dB meter = -18dBFS (+4dBu at XLR out)
Meter Calibration	-3dBFS (+19dBu at XLR out), multi-point sensing
Meter Peak indication	-48dBFS (-26dBu at XLR out)
Meter Signal indication	

Control

Touch Screen	5" TFT, 800x480 resolution
SoftKeys	10
Mute Groups	4
DCA Groups	4
Network	TCP/IP Ethernet for MIDI and iPad app

Input Processing

Source	
CH1-32	Local, dSNAKE, or USB
ST1, ST2	Local, dSNAKE, or USB
ST3	Local, dSNAKE, or USB Stereo
USB Global Source	Qu-Drive or USB B Streaming
Stereo Linking	Odd/even input pairs
Parameters linked	EQ, dynamics, insert, delay, assignments, sends
Link options	Preamp, polarity, sidechains, fader/mute, pan
Polarity	Normal/Reverse
High Pass Filter	12dB/octave 20Hz – 2kHz
Insert	Assign FX1-4 into Input channels
Delay	Up to 85ms
Gate	Self-key Sidechain
Threshold / Depth	-72dBu to +18dBu / 0 to 60dB
Attack / Hold / Release	50us to 300ms / 10ms to 5s / 10ms to 1s
PEQ	4-Band fully parametric, 20-20kHz, +/-15dB
Band 1	Selectable LF Shelving (Baxandall), Bell
Band 2, Band 3	Bell
Band 4	Selectable HF Shelving (Baxandall), Bell
Bell Width	Non-constant Q, variable, 1.5 to 1/9th octave
Compressor	Self-key Sidechain
Threshold / Ratio	-46dBu to 18dBu / 1:1 to infinity
Attack / Release	300us – 300ms / 100ms - 2s
Knee	Soft/Hard
Types	Peak Manual, RMS Manual, SlowOpto, PunchBag

Mix Processing

Channel Direct Out to USB	Follow Fader, follow Mute (global options)
Source select (global)	Post-Preamp, Pre-EQ, Post-EQ, Post-Delay
Insert	Assign FX into Mix channels
Delay	Up to 170ms
GEQ	Constant 1/3 oct, 28 bands 31Hz-16kHz, +/-12dB Gain

Meter Type	Fast (peak) response
Sampling Rate	48kHz +/-100PPM
ADC, DAC	24-bit Delta-Sigma
Latency	1.2 ms (local XLR in to XLR out) 0.7 ms (local XLR in to AES out)
Operating Temperature Range	0 deg C to 35 deg C (32 deg F to 95 deg F)
Mains Power	100-240V AC, 50/60Hz
Maximum Power Consumption	150W

USB Audio

Qu-Drive	USB A
Stereo Record	2 channel, WAV, 48kHz, 24-bit, patchable
Stereo Playback	2 channel, WAV, 44.1 or 48kHz, 16 or 24-bit, to ST3
Multitrack Record	18 channel, WAV, 48kHz, 24-bit, patchable
Multitrack Playback	18 channel, WAV, 48kHz, 24-bit
USB Audio Streaming	USB B, Core Audio compliant
Send (upstream)	32 channel, WAV, 48kHz, 24-bit
Return (downstream)	32 channel, WAV, 48kHz, 24-bit

Dimensions & Weights

	Width x Depth x Height
Desk mounted	440 x 180 x 181 mm (17.3" x 7" x 7")
Rack mounted	483 x 174 x 181 mm (19" x 6.9" x 7") 4U
Packed in shipping box	620 x 310 x 310 mm (24.4" x 12.2" x 12.2")
Unpacked weight	6.6 kg (14.5 lbs)

PEQ	4-Band fully parametric, 20-20kHz, +/-15dB
Band 1	Selectable LF Shelving (Baxandall), Bell
Band 2, Band 3	Bell
Band 4	Selectable HF Shelving (Baxandall), Bell
Bell Width	Non-constant Q, variable, 1.5 to 1/9th octave
Compressor	Self-key Sidechain
Threshold / Ratio	-46dBu to 18dBu / 1:1 to infinity
Attack / Release	300us – 300ms / 100ms - 2s
Knee	Soft/Hard
Types	Peak Manual, RMS Manual, SlowOpto, PunchBag
FX	
Internal FX	4x RackFX engine, Send>Return or Inserted
Audio Tools	
Types	Reverbs, Delays, Gated Reverb, ADT Chorus, Symphonic Chorus, Phaser, Flanger
4 dedicated Stereo FX returns	Fader, Pan, Mute, Routing to Mix/LR, 4-Band PEQ
PAFL	PFL or stereo in-place AFL, 0 to -24dB Trim, 85ms Delay
Talkback	Assignable to any mix, 12dB/oct HPF
Signal Generator	Assignable to any mix, Sine / White/Pink/Band-pass Noise
RTA	31-Bands 1/3 octave 20-20kHz, follows PAFL source