JBL4671A

COMPONENT EXPLODED VIEW

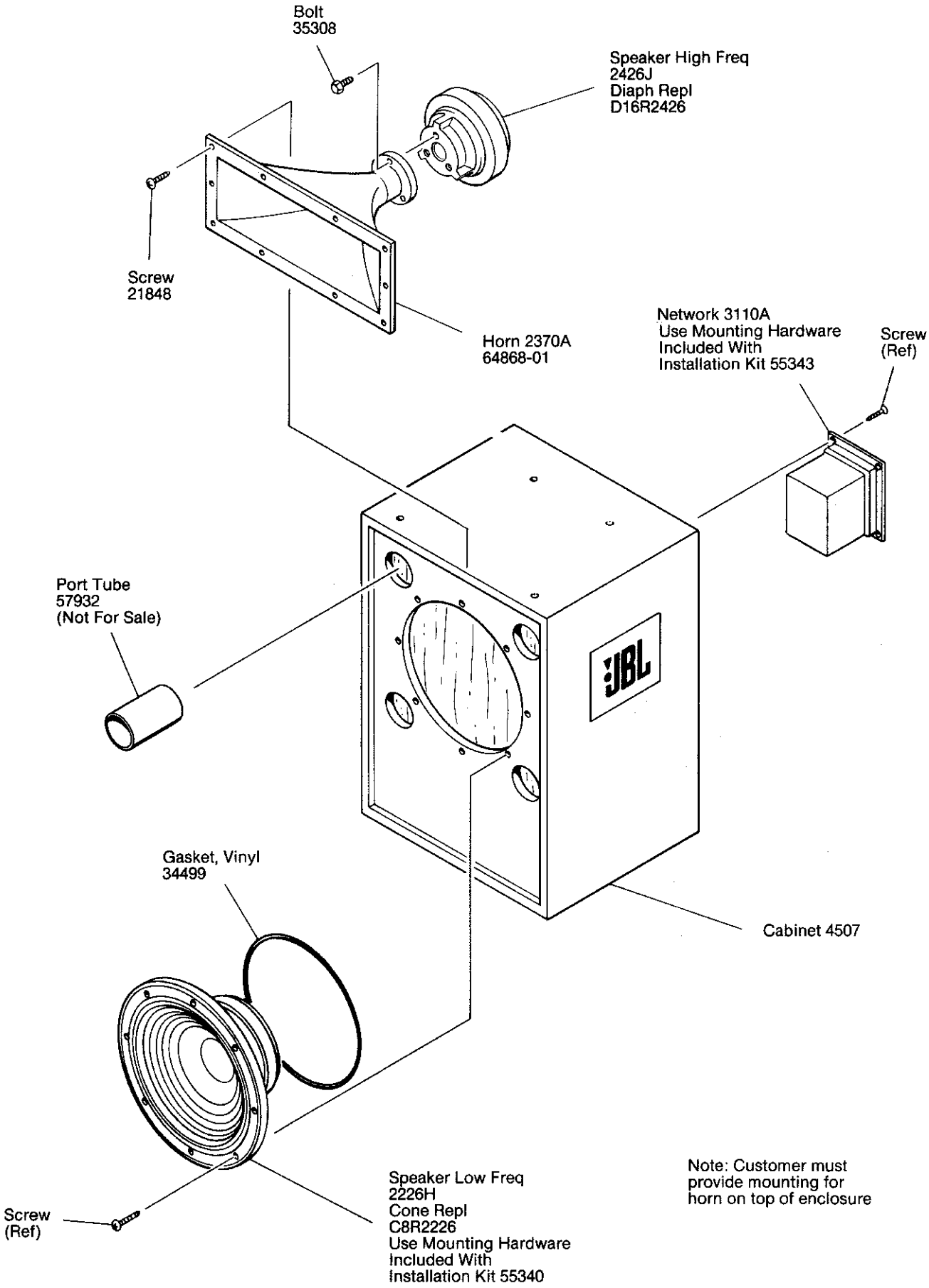

Note: Customer must provide mounting for horn on top of enclosure